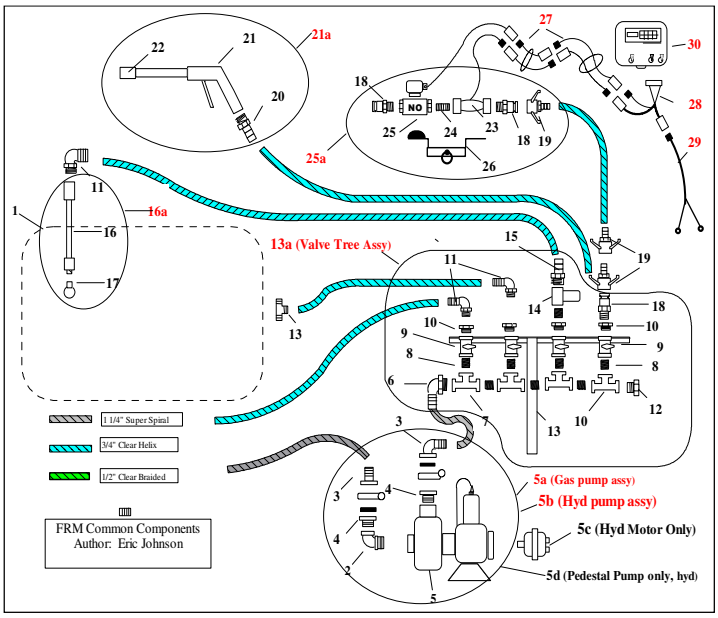

FRM Common Components
Author: Eric Johnson

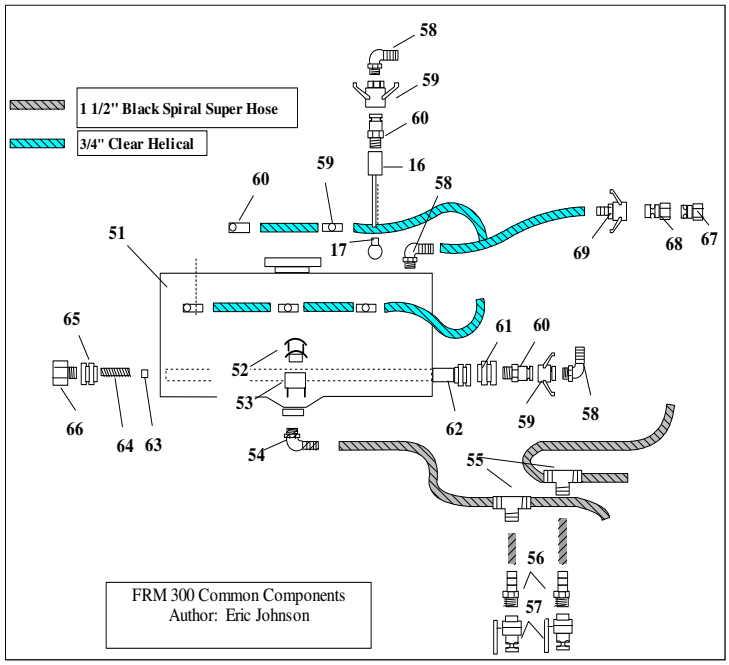

FRM 300 Common Components
Author: Eric Johnson

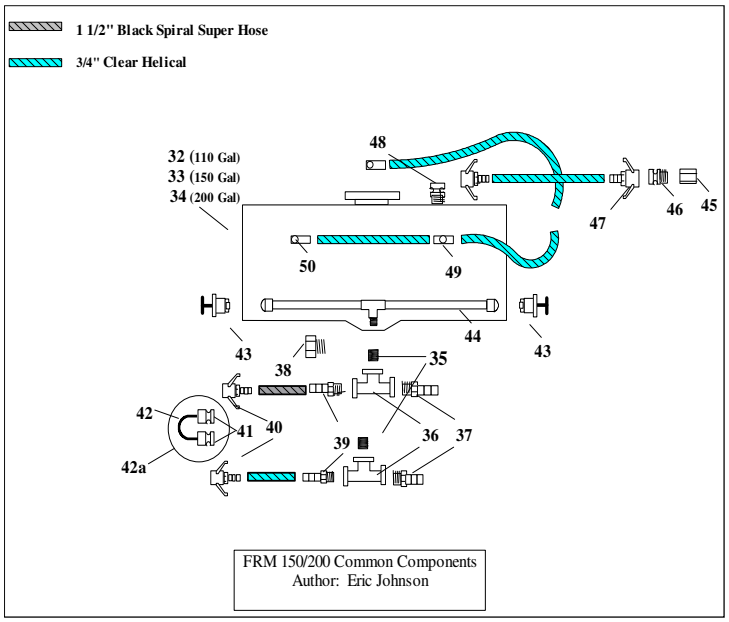

FRM 150/200 Common Components
Author: Eric Johnson

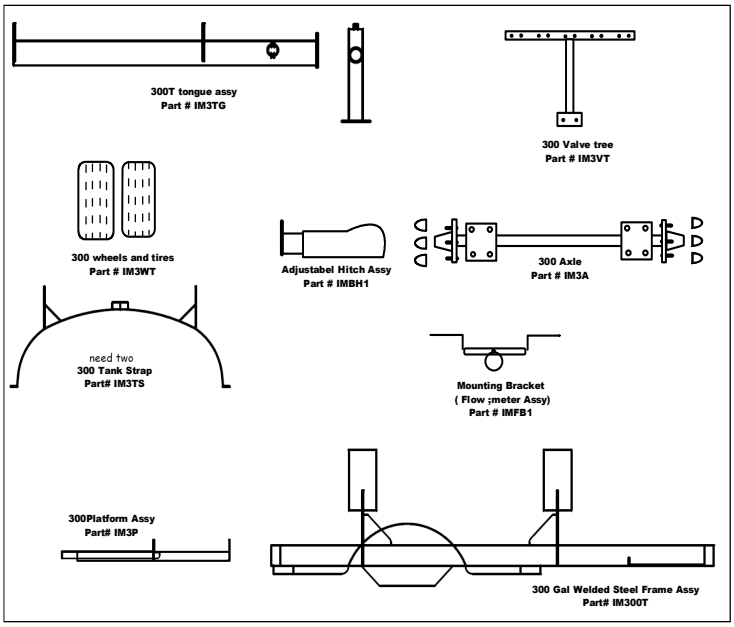

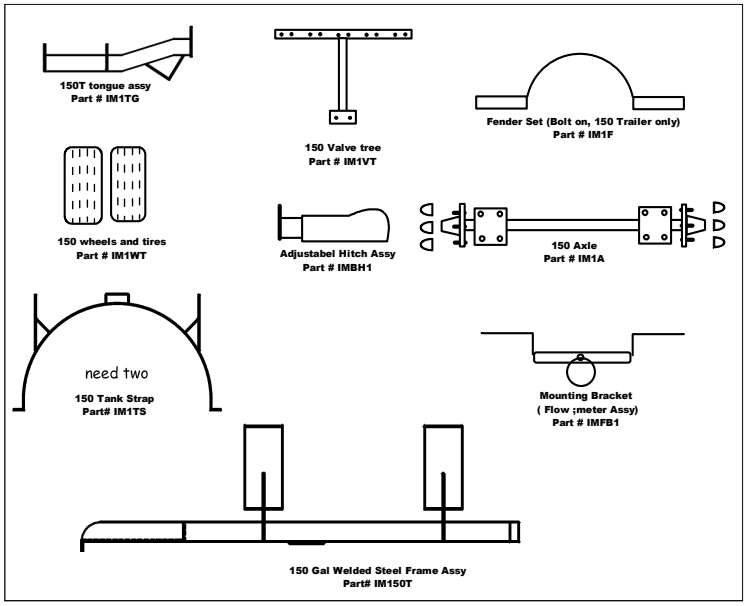

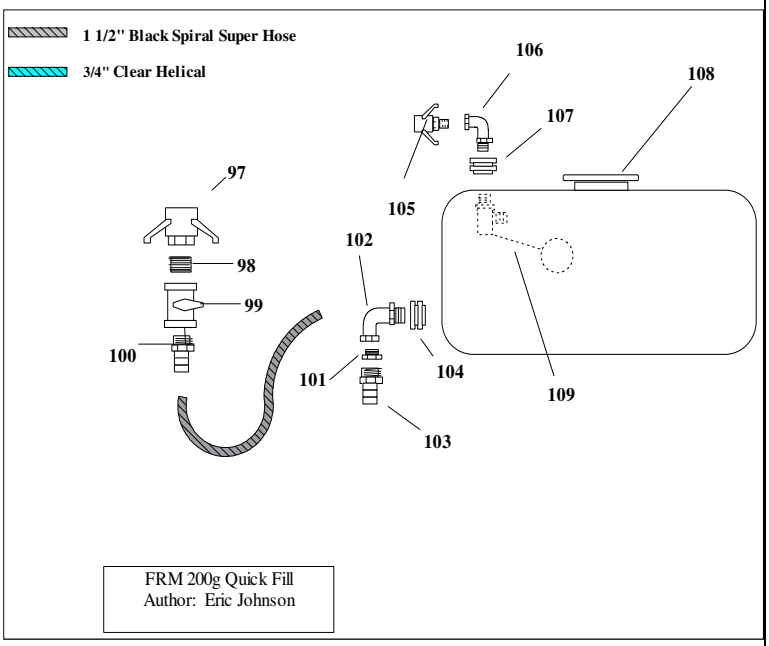

FRM 200g Quick Fill
Author: Eric Johnson

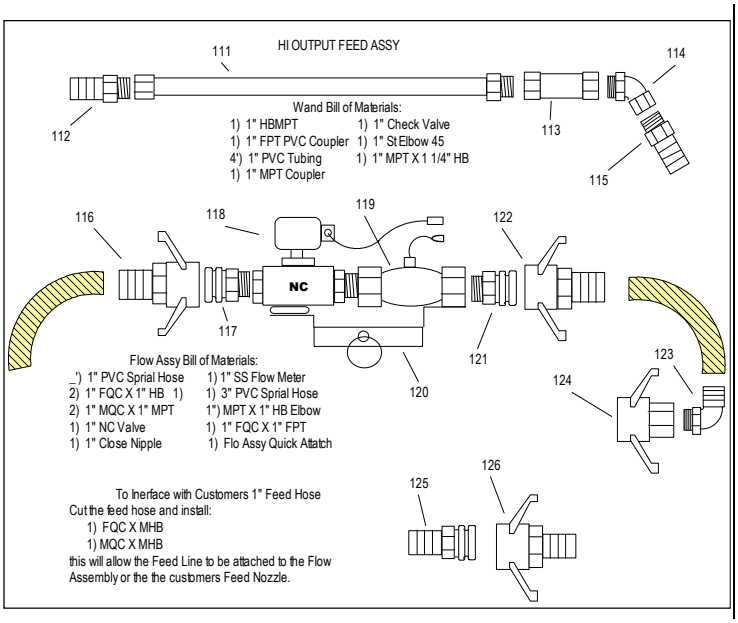
HI OUTPUT FEED ASSY
111
112
113
114
115
Wand Bill of Materials:
1) 1" HBMPT
1) 1" FPT PVC Coupler
4') 1" PVC Tubing
1) 1" MPT Coupler
1) 1" Check Valve
1) 1" St Elbow 45
1) 1" MPT X 1 1/4" HB
116
117
118
119
120
121
122
123
124
125
126
NC
Flow Assy Bill of Materials:
_') 1" PVC Sprial Hose
2) 1" FQC X 1" HB 1)
2) 1" MQC X 1" MPT
1) 1" NC Valve
1) 1" Close Nipple
1) 1" SS Flow Meter
1) 3" PVC Sprial Hose
1") MPT X 1" HB Elbow
1) 1" FQC X 1" FPT
1) Flo Assy Quick Attatch
To Inerface with Customers 1" Feed Hose
Cut the feed hose and install:
1) FQC X MHB
1) MQC X MHB
this will allow the Feed Line to be attached to the Flow
Assembly or the the customers Feed Nozzle.

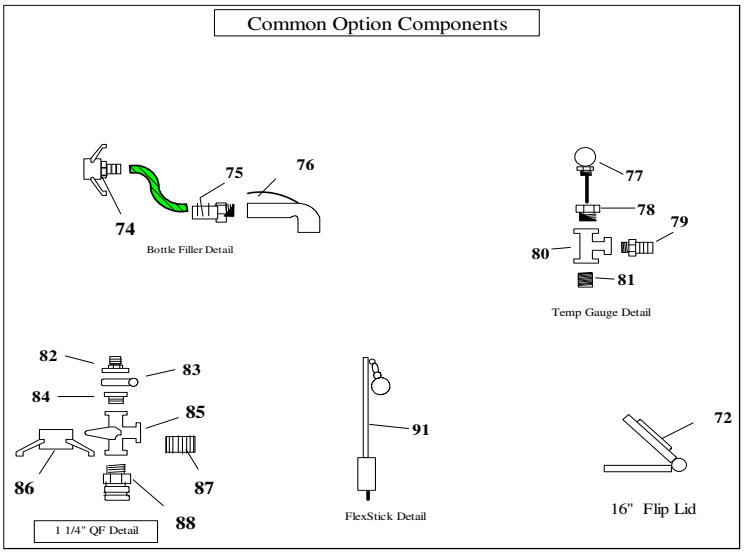
Common Option Components
74
75
76
Bottle Filler Detail
77
78
79
80
81
Temp Gauge Detail
82
83
84
85
86
87
88
1 1/4" QF Detail
91
FlexStick Detail
72
16" Flip Lid